Gate Kit - 80324

mimSAFE

mimclip.mimsafe.com

IMPACT TECHNOLOGY
UNIVERSAL SAFETY
SINCE
1986

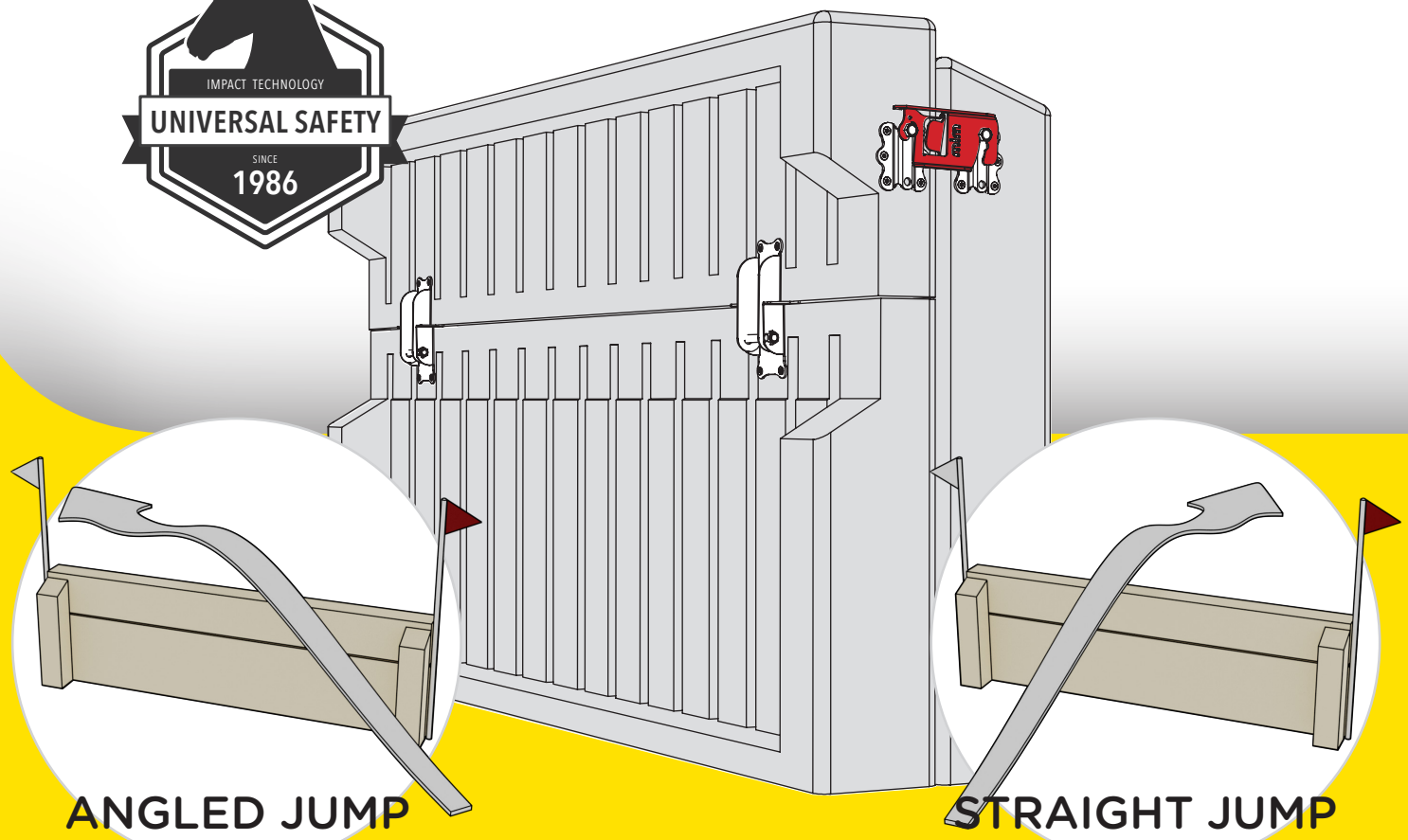

ANGLED JUMP

USING YELLOW CLIP

order separately
kit nr.80328

STRAIGHT JUMP

USING RED CLIP

included in this kit

INTENDED
JUMPING ANGLE

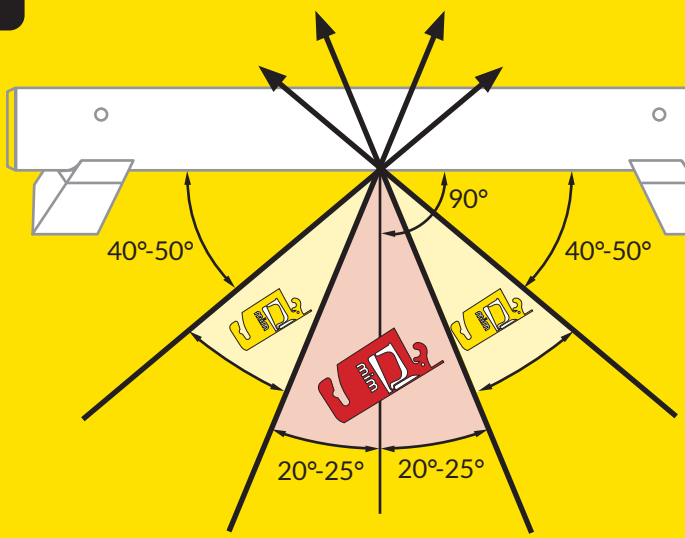

RECOMMENDED TOOL

FEI APPROVED

INFORMATION ABOUT THE WALL KIT

The Wall Kit has been designed and developed specifically to greatly reduce the risk of rotational falls. The most important element of this kit is that it will not break the fence or risk injury to the horse if hit vertically. The top section is only released when impacted horizontally by the horse. The risk of a resulting rotational fall is thus reduced.

FENCE DIMENSIONS

POST

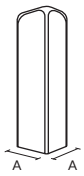

MAX A DIMENSIONS

10	inch
250	mm

TOP SECTION
ANGLED JUMP

Check step 2

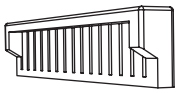

MAX THICKNESS

10	inch
250	mm

MAXIMUM LENGTH

177	inch
4500	mm

MAX HEIGHT

16.5	inch
420	mm

MAX WEIGHT

200	lb
90	kg
MAY ONLY BE EXCEEDED BY 25%	

TOP SECTION
STRAIGHT JUMP

Check step 2

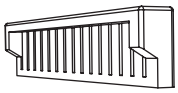

MAX THICKNESS

10	inch
250	mm

MAXIMUM LENGTH

177	inch
4500	mm

MAX HEIGHT

16.5	inch
420	mm

MAX WEIGHT

200	lb
90	kg
MAY ONLY BE EXCEEDED BY 25%	

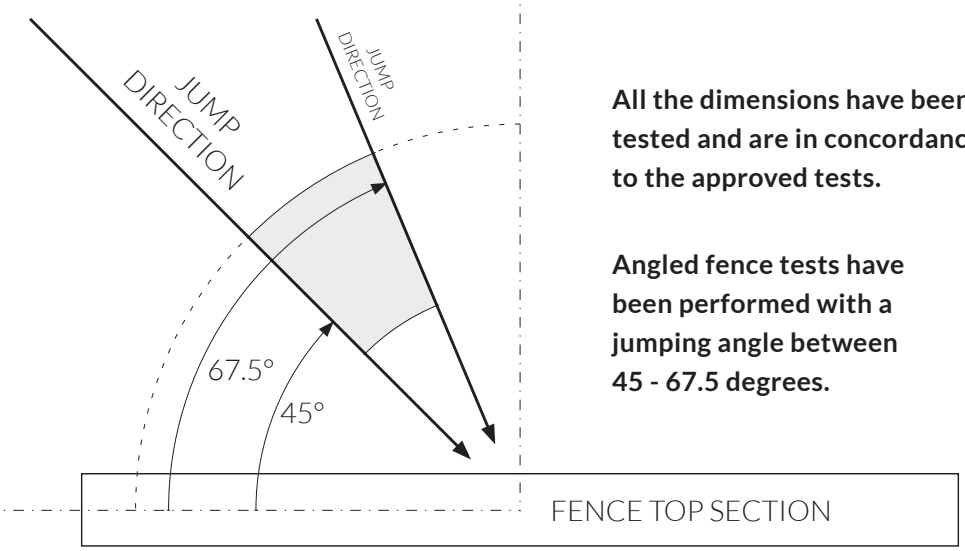

All the dimensions have been tested and are in concordance to the approved tests.

Angled fence tests have been performed with a jumping angle between 45 - 67.5 degrees.

RECOMMENDED MATERIAL

SPRUCE OR PINEWOOD

Very dry wood material could increase up to 50% in weight when exposed to very wet conditions.

It is essential to follow the recommended instructions on the fence for the correct function. All WEIGHTS may be exceeded by no more than 25% of the relevant maximum weight as specified above. There are NO MINIMUM WEIGHTS.

For your own safety and that of others please note the following step by step advice for correct preparation and installation. Always ensure that you follow your own health and safety requirements when constructing this fence.

CAUTION: The fence could cause risk of injury in upfolded position if accidentally released.

Ensure that you have all parts of the Wall Kit.
Be aware of the risk of injury when handling heavy rails, posts and the tools for mounting.

WARNING!

THE TOP SECTION IS THE FOLDABLE PART OF THE FENCE AND NEEDS TO BE TORSIONALLY RIGID

A torsionally rigid object is achieved by making a box construction. This concerns the top section which should be a rounded or square box construction. This is to avoid torsion when the fence is activated by impact of center.

IMPORTANT

The posts must be:

VERTICALLY LEVELLED TO GRAVITY USING A SPIRIT LEVEL OR A CONSTRUCTION PLUMMET

IMPORTANT

The marked surfaces must be:

LEVELED & VERTICAL

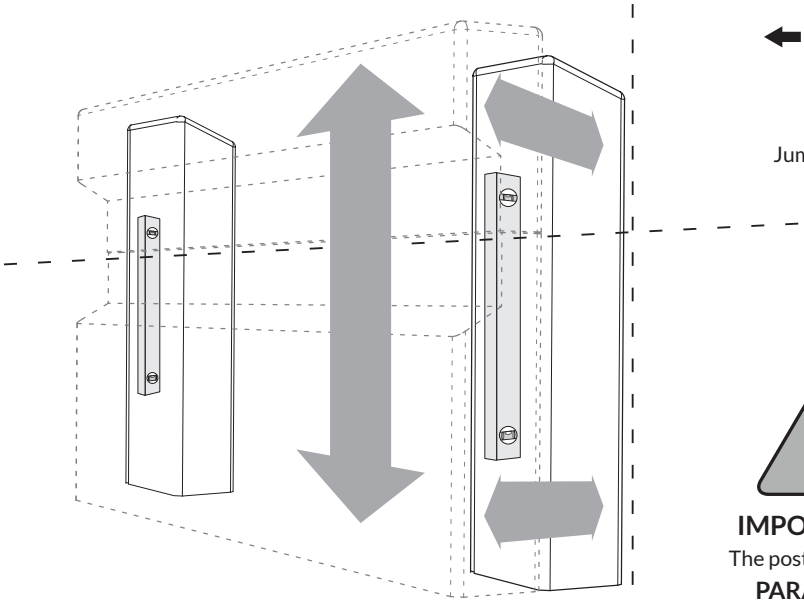

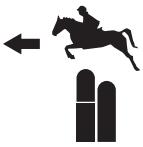

Jumping direction

IMPORTANT

The posts must be:

PARALLEL, & FRONTAL ALIGNED & SECURED TO THE GROUND

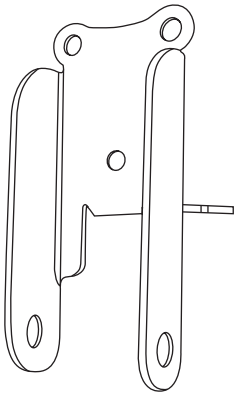

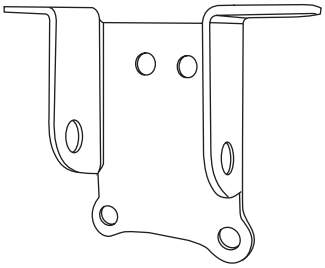

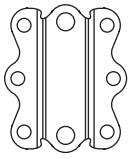

order separately
kit nr.80328

A	F76D Part no	2x
B	F76C Part no	2x
C	F70A Part no	4x
D	F18C Part no	6x
D	F18F Part no	6x

M-SM12x90	M-BR12x22x2s	M-MM12Ny	M-TS10X90	POST	TOP SECTION	BOTTOM SECTION
2X	2X	2X	4X	2X	1X	1X
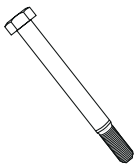			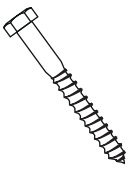	not included	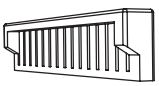 not included	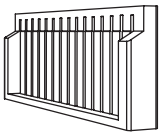 not included

IMPORTANT

It is important that the top section is torsionally stiff.

HOW TO CHECK TORSIONAL STIFFNESS

Hold up the Top Section by one end only according to schematic below. While this is being held parallel to ground, measure the distances H left and H right.

These may only differ by 10 mm per 1000 mm in length L

Example:
L=3000 mm
Allowed difference between right and left in H=30 mm

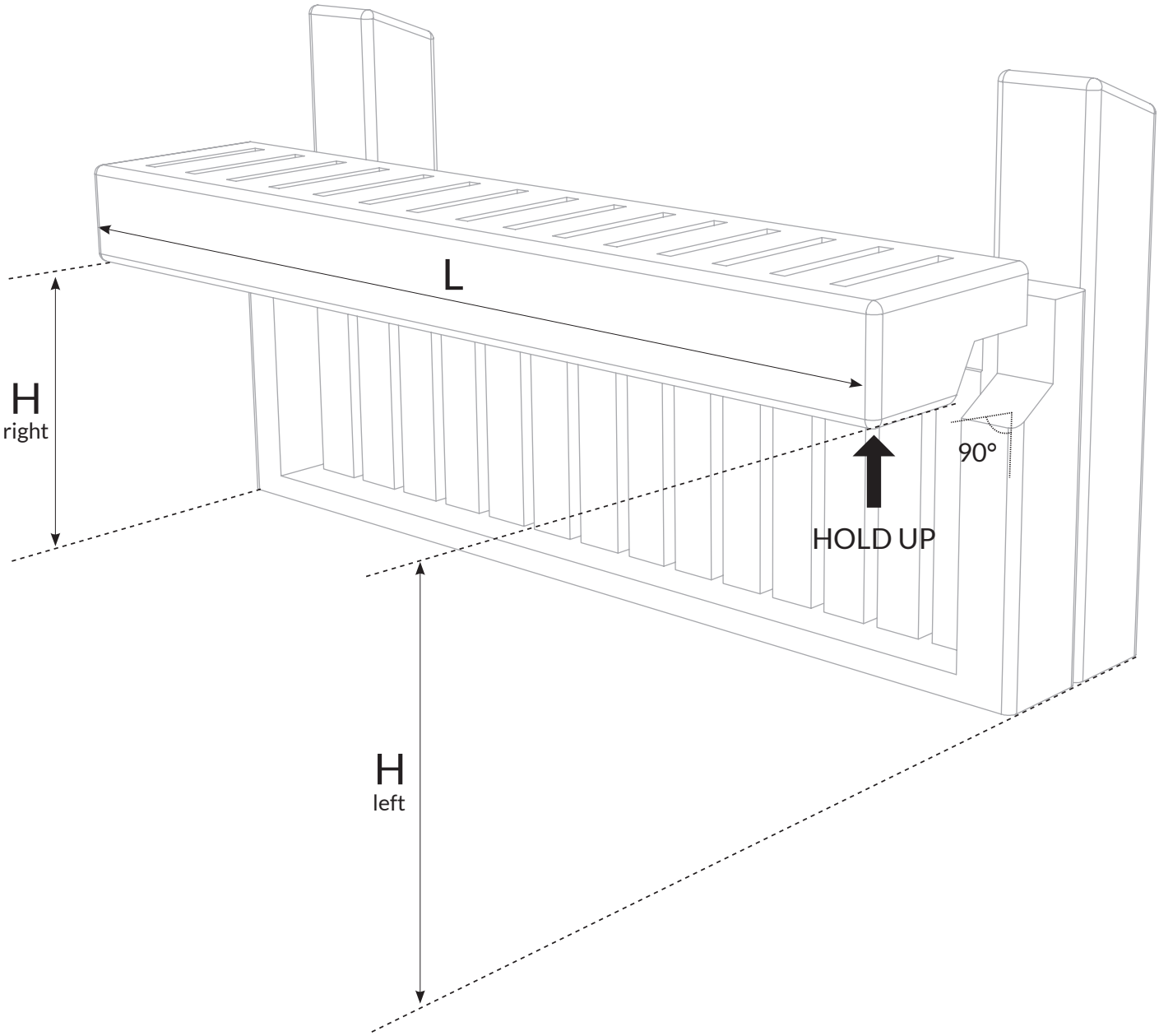

STEP 1

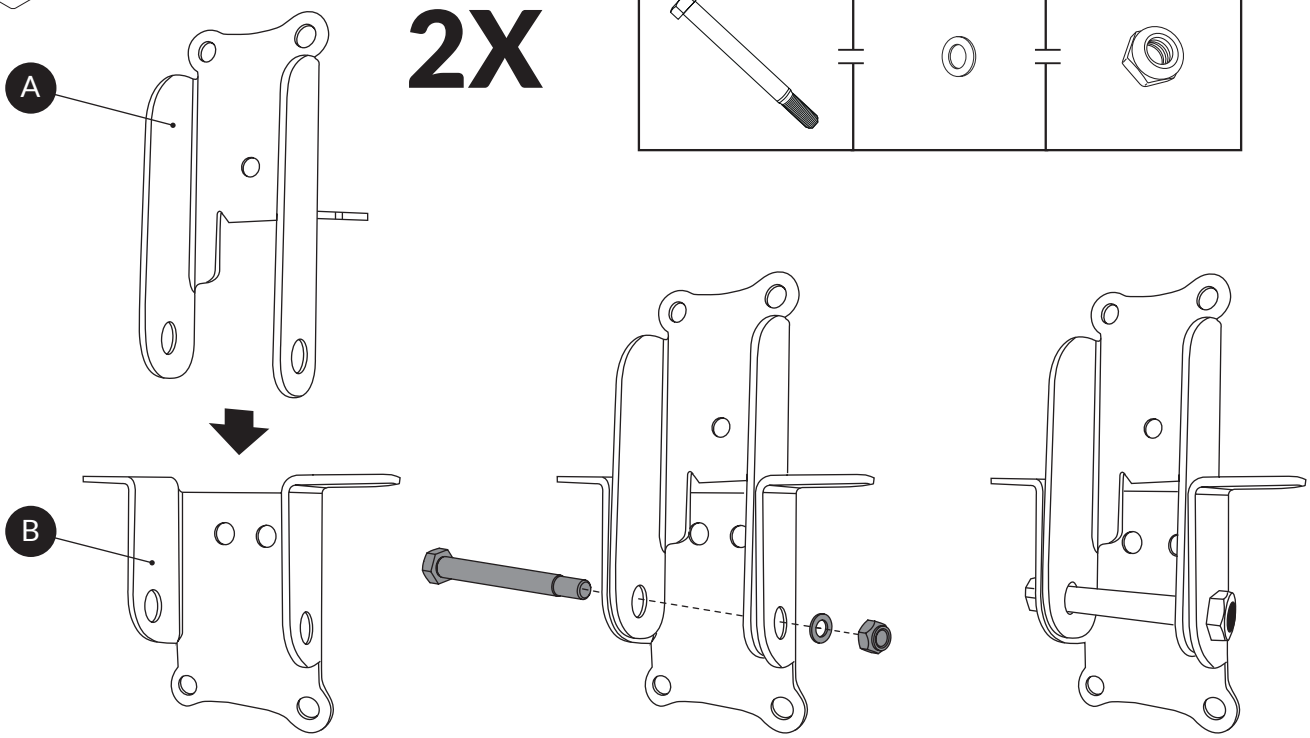

M-SM12x120	M-BR12x22x2s	M-MM12Ny
2X	2X	2X

STEP 2

IMPORTANT

Don't cut until the clip is correctly mounted.

Make sure you follow the cutting measurements for correct fence release/function

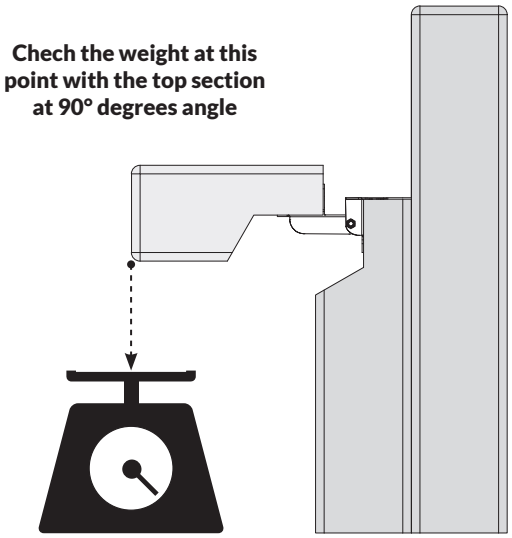

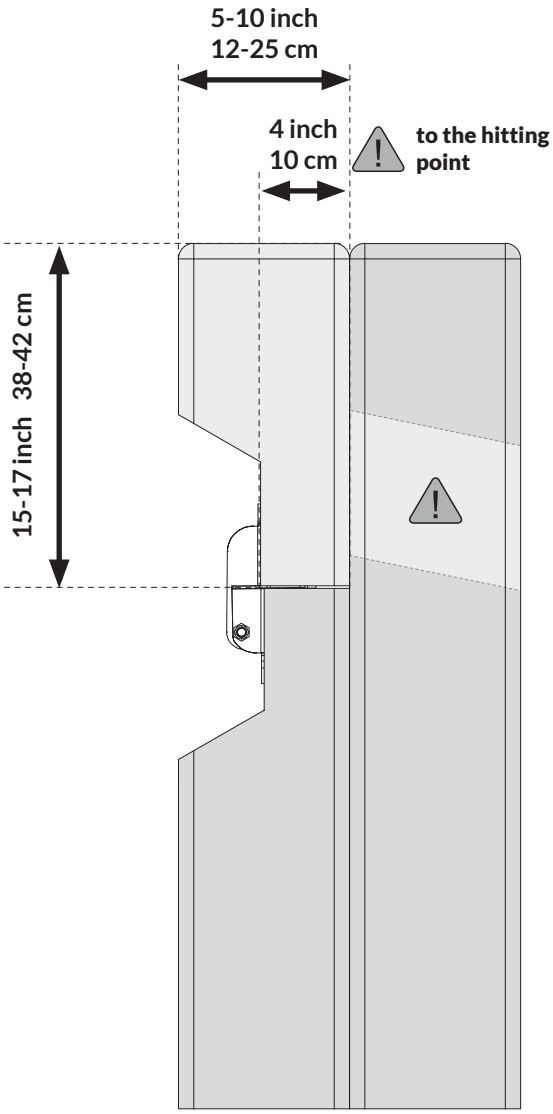

STEP 3

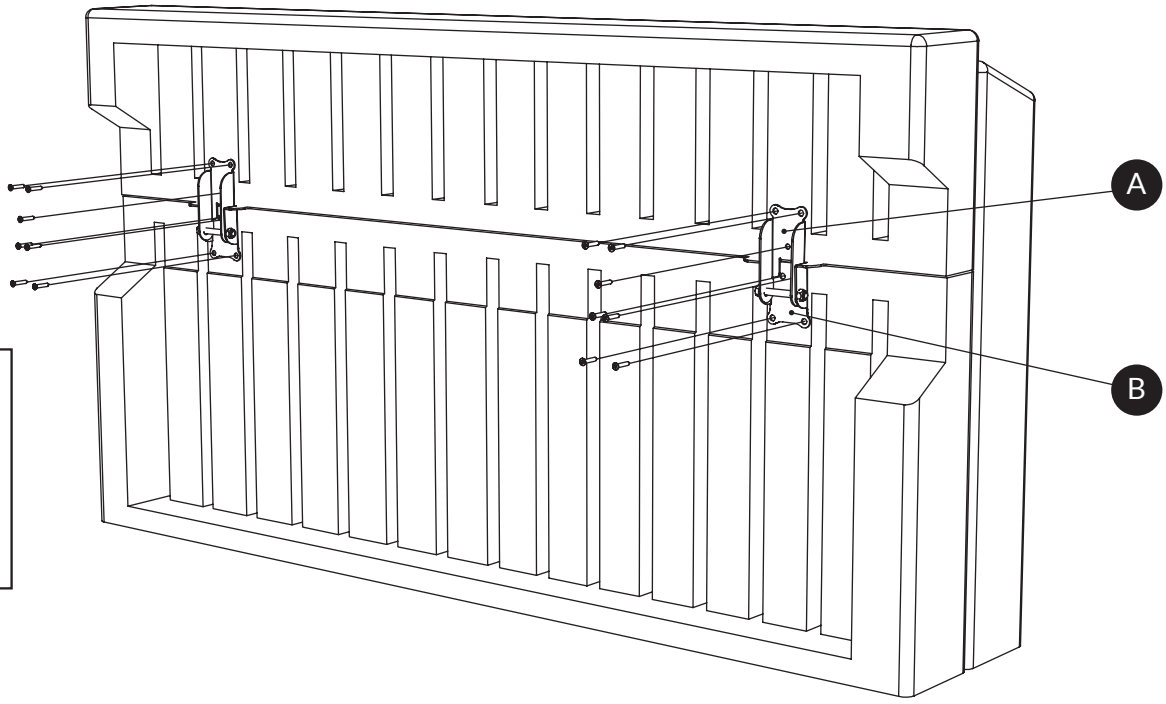

14X

not included

STEP 4

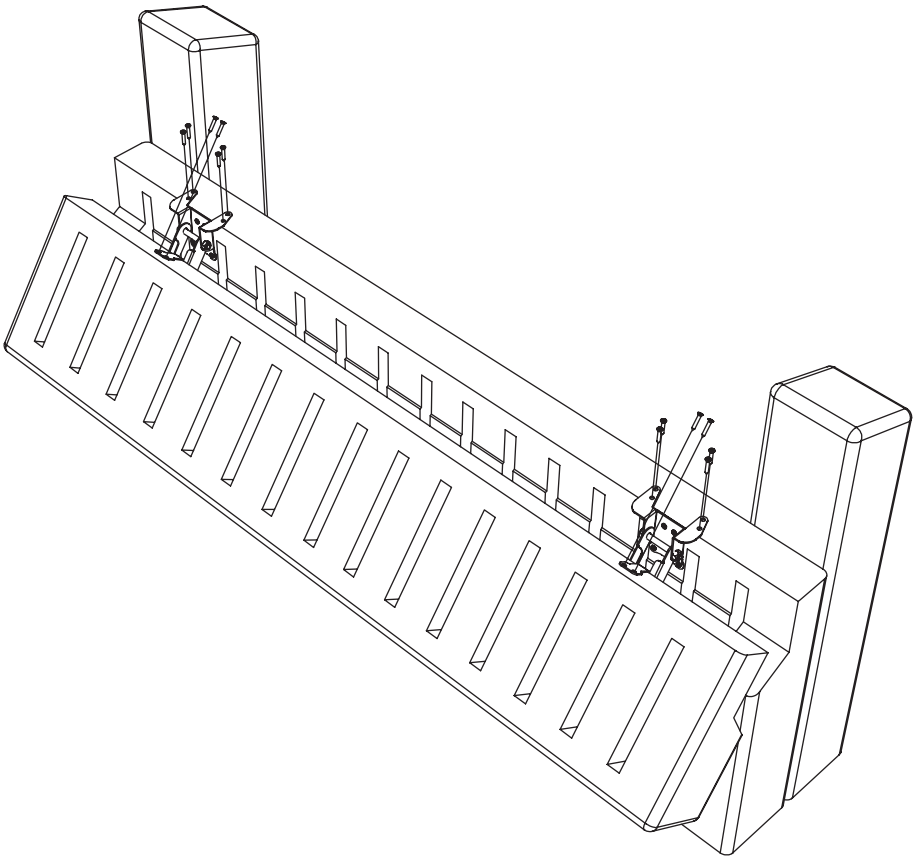

12X

not included

STEP 5

POSITIONING OF CLIP FOR **ANGLED JUMP**

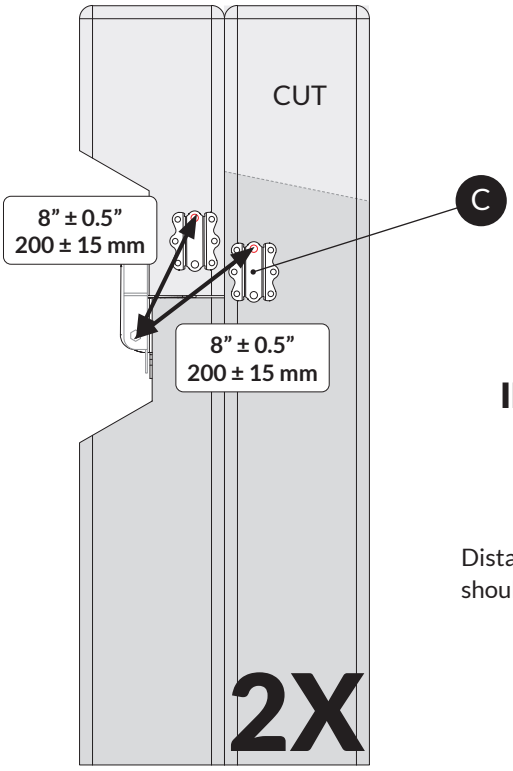

POSITIONING OF CLIP FOR **STRAIGHT JUMP**

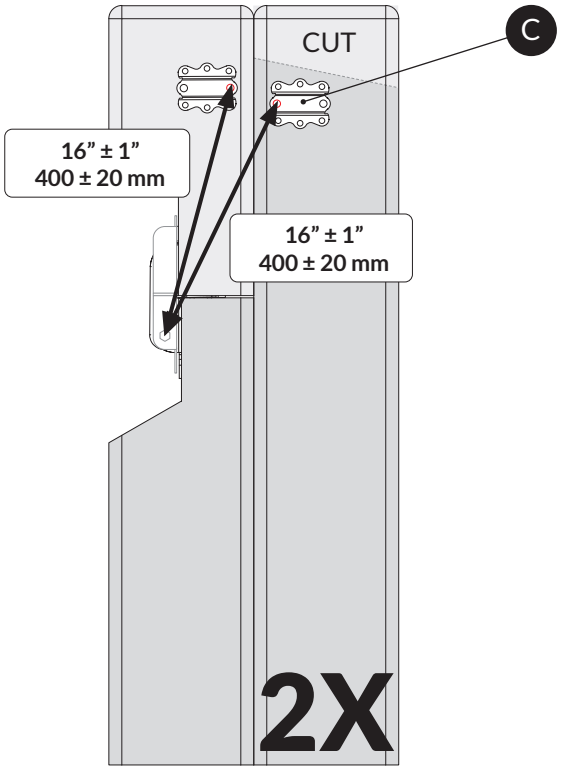

IMPORTANT

Distance between brackets should be adjusted to avoid clip D rattling.

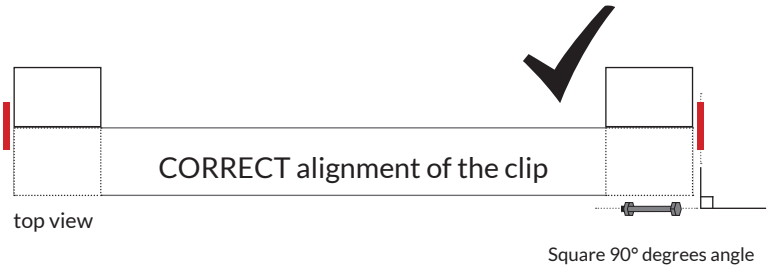

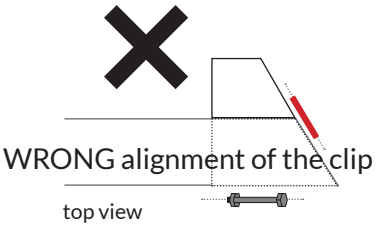

THE CLIP MUST BE INSTALLED PERPENDICULAR (90°) TO THE HINGE

STEP 6

2X

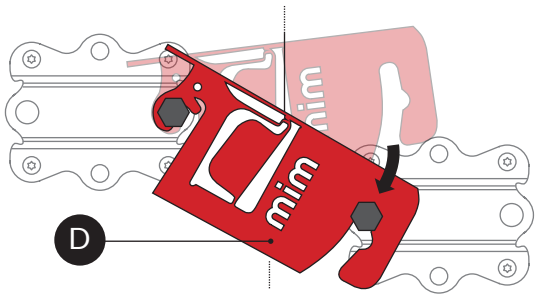

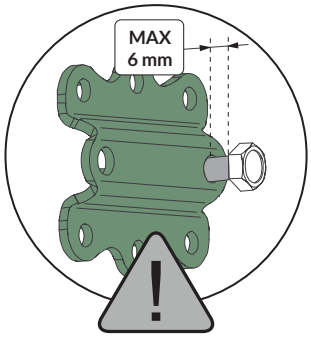

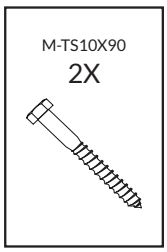

IMPORTANT

If the clip D is loose, tighten by gently driving a wedge between post and rail, underneath the clip. Necessary for correct function of the clip.

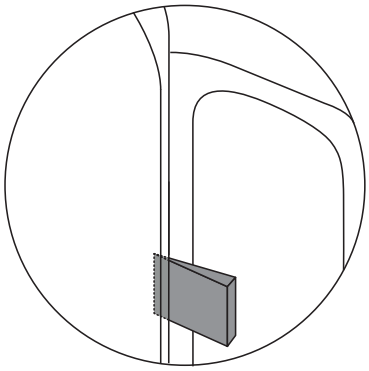

IMPORTANT

When top section is released the gap between top section and bottom section should be **maximum 50 mm.**
If gap is wider, then place object to shrink/reduce the gap.

When top section is released the distance between top section and ground should be **minimum 200 mm.**
If distance between ground and top section is less, then place an object which will prevent the top section falling into the **SAFE AREA**

The flag is bent when fatigued.

The advantages of the Wall Kit

1. It has been produced with safety being the first and foremost important factor.
2. Reduces the possibility of rotational falls.
3. FEI approved number FEI13SWE.
4. Controlled movement of fence during release.
5. Reconstruction time is less than 30 seconds.
6. The parts are made of powder coated steel and can be left outside, no maintenance is required.
7. The very highest quality of product from Sweden ISO 9001.

The advantages of the MIMclip

The MIMclip breaks on impact. The flag is bent when the clip is exposed to fatigue. In both cases the clip must be replaced. The top section is connected to the post with a hinge that makes the fence easy to reconstruct. This saves time, guarantees fair and correct judging for riders and contributes to the overall safety of the sport.